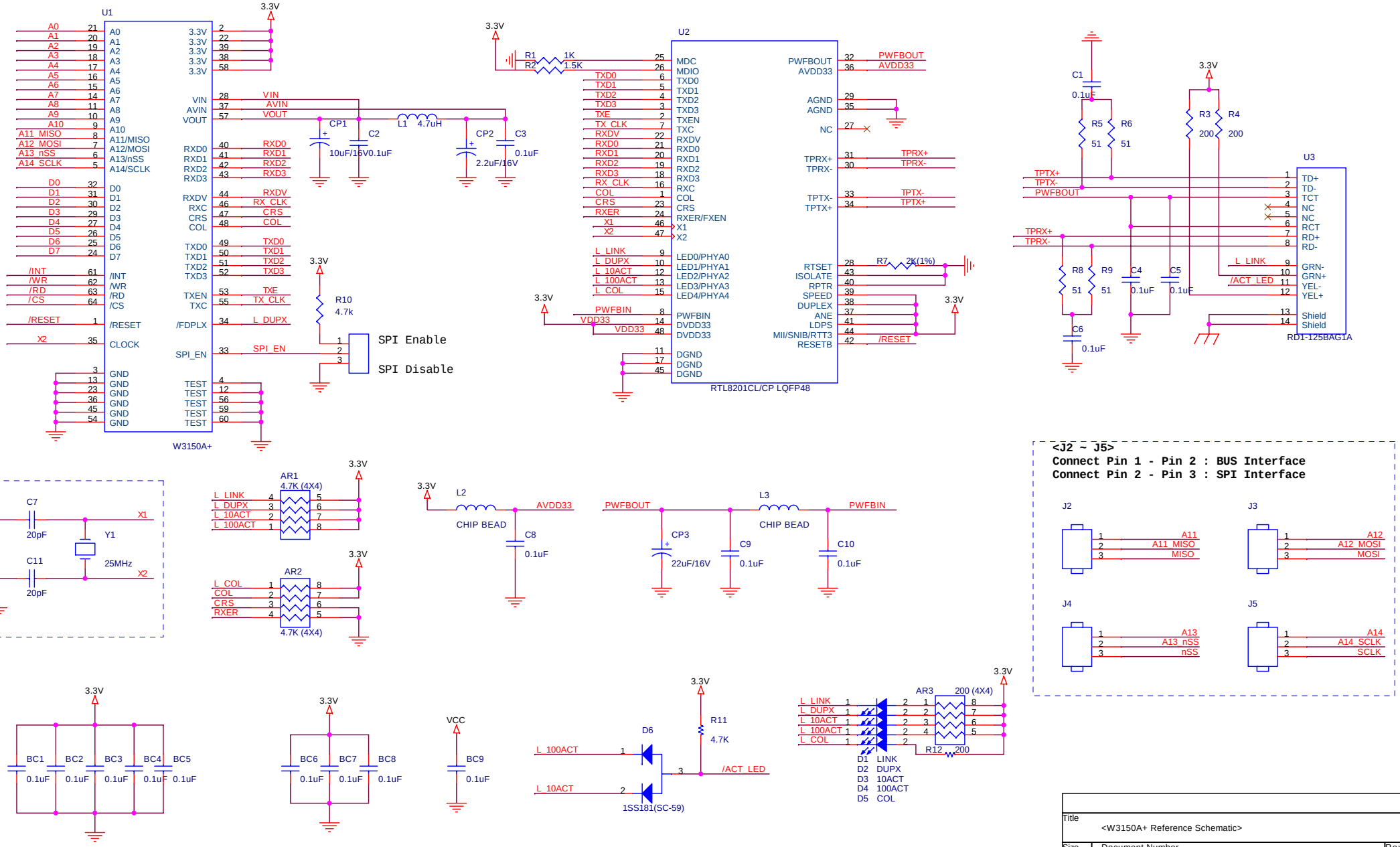
U1
W3150A+
U2
RTL8201CL/CP LQFP48
U3
RD1-125BAG1A
SPI Enable
SPI Disable
AR1
4.7K (4X4)
AR2
4.7K (4X4)
AR3
200 (4X4)
L2
CHIP BEAD
L3
CHIP BEAD
Y1
25MHz
D6
1SS181(SC-59)
D1 LINK
D2 DUPX
D3 10ACT
D4 100ACT
D5 COL
<J2 ~ J5>
Connect Pin 1 - Pin 2 : BUS Interface
Connect Pin 2 - Pin 3 : SPI Interface
J2
J3
J4
J5
Title
<W3150A+ Reference Schematic>
Size
B
Document Number
<Doc>
Rev
1.0
Date:
Thursday, September 07, 2006
Sheet
1
of
2